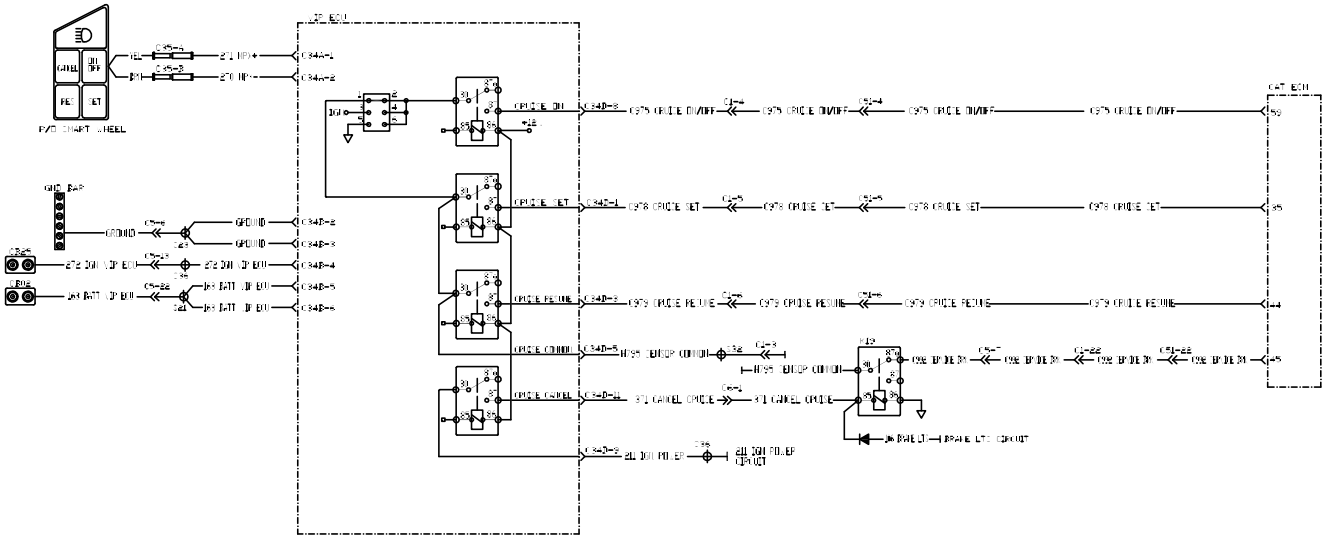

ELECTRONIC DESIGN & ASSEMBLY, INC.
A DIVISION OF SMC CORPORATION
545 SPRINGFIELD BLVD.
P.O. BOX 5639
BEND, OREGON 97708

THIS DRAWING AND THE INFORMATION CONTAINED HEREIN IS PROPRIETARY TO SMC AND SHALL NOT BE REPRODUCED OR DISCLOSED IN PART OR IN WHOLE WITHOUT WRITTEN PERMISSION BY AN AUTHORIZED AGENT OF SMC.

TOLERANCES
DROP-OUTS: ±3"
DROP LENGTHS: ±3"

SCALE: NO SCALE

REV	DATE	BY	DESCRIPTION
0	2-19-04	EM	PUBLICATION

TITLE: CRUISE CONTROL
SHEET: 1 OF 1
DWN BY: E MONZALVO
DWG # HA05CRUISECNTRL
MODEL: 2005 MARQUIS