Batteries and Charging

Generator, inverter, and connections on the isolator are reversed from their physical positions for clarity

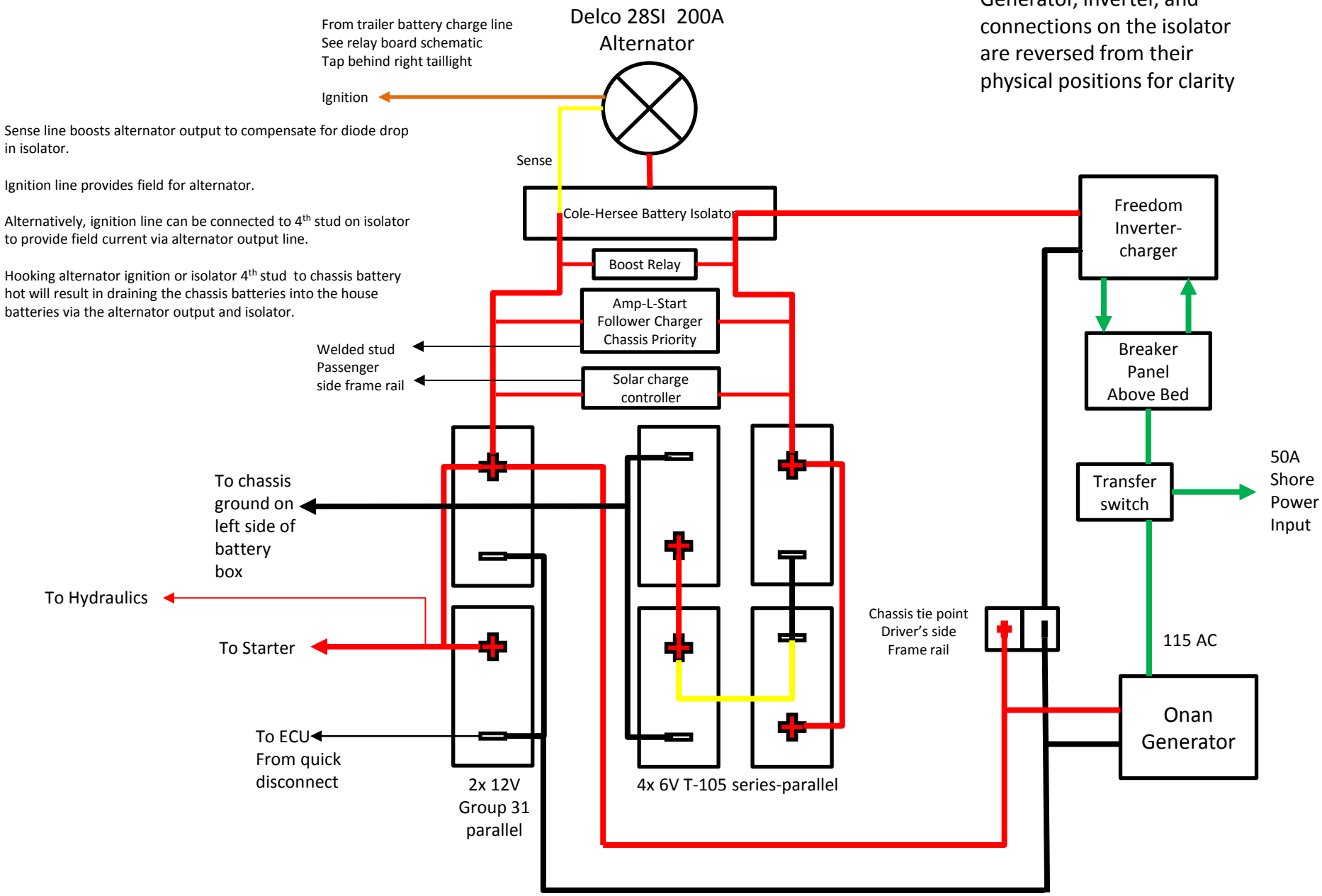

Sense line boosts alternator output to compensate for diode drop in isolator.

Ignition line provides field for alternator.

Alternatively, ignition line can be connected to 4th stud on isolator to provide field current via alternator output line.

Hooking alternator ignition or isolator 4th stud to chassis battery hot will result in draining the chassis batteries into the house batteries via the alternator output and isolator.